PRODUCT DATA SHEET

Burlington®

PRODUCT CODE

SN800FSSGR

RANGE

Strand

DESCRIPTION

Strand Basin Unit Floorstanding 800mm Spruce Green

CATEGORY	Furniture
WARRANTY DETAILS	10 Years
COLOUR	Spruce Green
FINISH APPLICATION	Lacquered
PRIMARY MATERIAL	MDF
SECONDARY MATERIAL	Wood
INSTALL TYPE	Floor Standing
PRODUCT WIDTH MM	773
PRODUCT HEIGHT MM	822
PRODUCT LENGTH MM	446
PRODUCT NET WEIGHT KG	41

STANDARDS	EN14749:2016
COLOUR CODE / REFERENCE	EGGER reference U665 Stone Green
DRAWER BOX	MFC
DRAWER RUNNERS	DTC / SS10C350H1
DRAWER EXTENSION	Full extension
DRAWER ADJUSTMENT	2 way adjustment
WALL HANGERS	No
ADJUSTABLE FEET	No
DRAWER CAPACITY	15 kgs
DRAWER OPERATION	Soft close

TECHNICAL DIMENSIONS

Dimensions in mm unless otherwise specified.

Tolerances (per material type) apply.

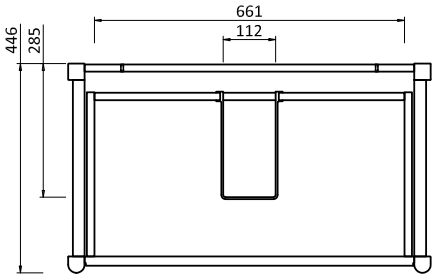

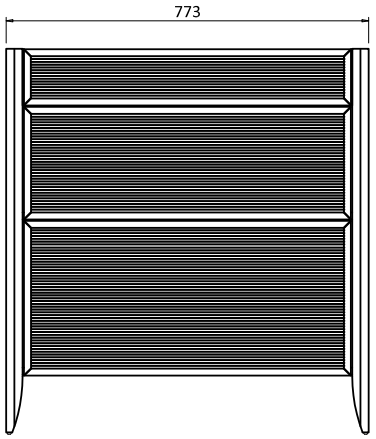

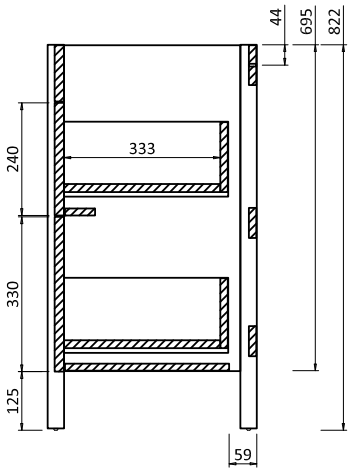

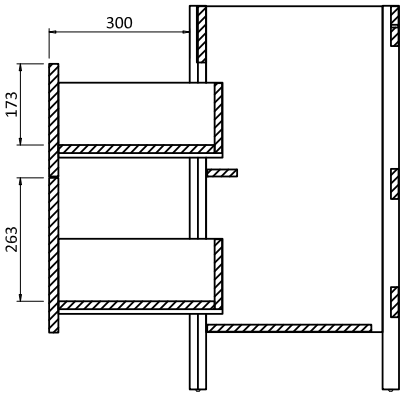

Burlington®

SPARES LIST

Only the parts labelled are available as spares.

NUMBER	PART CODE	DESCRIPTION
1	SP2105	Drawer runner for Strand Floorstanding Basin Unit (one pair)
2	SP2126	Top drawer front for Strand Floorstanding Basin Unit 800mm Matt White
	SP2114	Top drawer front for Strand Floorstanding Basin Unit 800mm Light Oak
	SP2120	Top drawer front for Strand Floorstanding Basin Unit 800mm Spruce Green
	SP2108	Top drawer front for Strand Floorstanding Basin Unit 800mm Light Taupe
3	SP2127	Bottom drawer front for Strand Floorstanding Basin Unit 800mm Matt White
	SP2115	Bottom drawer front for Strand Floorstanding Basin Unit 800mm Light Oak
	SP2121	Bottom drawer front for Strand Floorstanding Basin Unit 800mm Spruce Green
	SP2109	Bottom drawer front for Strand Floorstanding Basin Unit 800mm Light Taupe